BESSACARR

Individually styled
Beautifully built

BESSACARR MOTORHOMES
Dunswell Road, Cottingham, East Yorkshire HU16 4JX.
Tel: 01482 875740 Fax: 01482 840082
email: enquiry@swiftleisure.co.uk
website: www.bessacarrmotorhomes.co.uk
A MEMBER OF THE SWIFT GROUP

1068648 v2 issued November 2006

bessacarrmotorhomes

E500 Series specification, wiring diagrams & bulb chart

BESSACARR

Individually styled
Beautifully built

CONTENTS

Standard Specifications.....2

Capacities 3

Towing Capabilities 4

Jacking.....5

Wiring Diagrams.....6

Bulb Replacement 10

Standard Specifications

MODEL	E530 2.3L MWB	E520 2.3L LWB	E540 2.3L LWB	E560 2.3L LWB
Engine	Fiat '130 MultiJet' diesel	Fiat '130 MultiJet' diesel	Fiat '130 MultiJet' diesel	Fiat '130 MultiJet' diesel
Engine Capacity	2287cc	2287cc	2287cc	2287cc
Engine Power	130bhp @ 3600rpm	130bhp @ 3600rpm	130bhp @ 3600rpm	130bhp @ 3600rpm
Engine Torque	320Nm @ 2000rpm	320Nm @ 2000rpm	320Nm @ 2000rpm	320Nm @ 2000rpm
Chassis	Fiat special low line	Fiat special low line	Fiat special low line	Fiat special low line
Wheel base	3.45m/11'4"	4.04m/13'3"	4.04m/13'3"	4.04m/13'3"
Designated Passenger Seats	1	1	1	1
Berths (sleeping positions)	2	2	2	2
Overall Length (no ladder)*	6.54m/21'5"	6.54m/21'5"	6.54m/21'5"	7.04m/23'1"
Overall Width (mirrors folded)	2.35m/7'8"	2.35m/7'8"	2.35m/7'8"	2.35m/7'8"
Overall Height (inc. TV aerial)	2.79m/9'2"	2.79m/9'2"	2.79m/9'2"	2.79m/9'2"
Maximum Technical Permissible Laden Mass (A)	3500kg	3500kg	3500kg	3500kg
Mass in Running Order (B)†	2945kg	2985kg	2975kg	3060kg
Maximum User Payload (A-B)	555kg	515kg	525kg	440kg
Essential Habitation Equipment	12kg	12kg	12kg	12kg
Maximum recommended trailer weight	1250kg	1660kg	1660kg	1300kg
BED SIZES				
Front Double	2.11m x 1.82m/6'11" x 6'0"		2.11m x 1.37m/1.22m/6'11" x 4'6"/4'0"	
Front Nearside Single	1.82m x 0.71m/6'0" x 2'4"			
Front Offside Single	1.82m x 0.71m/6'0" x 2'4"			
Rear Double		2.11m x 1.82m/6'11" x 6'0"		1.90m x 1.32m/6'3" x 4'4"
Rear Nearside Single		1.92m x 0.70m/6'4" x 2'4"		
Rear Offside Single		1.82m x 0.70m/6'0" x 2'4"		

NOTE: 1. The **Maximum User Payload** includes:
a) the **conventional load** (this is the allowance for passengers)
b) **essential habitation equipment** (items and fluids required for safe and proper functioning of habitation equipment)
c) **optional equipment** (items available from the manufacturer over and above the standard specification)
d) **personal effects** (those items not covered by the above)

2. The **Mass in Running Order** is the mass of the unladen vehicle including a 75kg allowance for the driver plus engine coolants and 90% of the fuel tank, water tank and gas capacity.
3. PLEASE TAKE CARE TO ENSURE THAT YOU HAVE ALLOWED FOR THE MASSES OF ALL ITEMS YOU INTEND TO CARRY IN THE MOTOR CARAVAN, e.g. passengers, optional equipment, essential habitation equipment and personal effects, such as clothing, food, pets, bicycles, sailboards, sports equipment etc.
4. **WARNING** - UNDER NO CIRCUMSTANCES SHOULD THE MAXIMUM TECHNICAL PERMISSIBLE LADEN MASS OF THIS MOTOR CARAVAN BE EXCEEDED.

* For optional roof ladder (add 100mm)

Capacities

Water Tank Capacities

	Fresh Water Tank	Waste Water Tank	Water Heater	Toilet Tank (Flushing)
E500 Series	90 litre	68 litre	12 litre	0 litre

Gas Capacities

	Capacity
E500 Series	2 x 7kg

The above are recommended gas bottle sizes

NOTICE

For technical data on the base vehicle please refer to manufacturer's handbook

Bessacarr E500 Series Towing Capabilities

Model	Engine / Chassis	MTPLM	Permissible Front Axle Load	Permissible Rear Axle Load	Recommended Maximum Trailer Weight	Gross Train Weight
Bessacarr E530	2.3L / MWB	3500kg	1850kg	2000kg	1250kg	6000kg
Bessacarr E520	2.3L / LWB	3500kg	1850kg	2000kg	1660kg	6000kg
Bessacarr E540	2.3L / LWB	3500kg	1850kg	2000kg	1660kg	6000kg
Bessacarr E560	2.3L / LWB	3500kg	1850kg	2000kg	1300kg	6000kg

To ensure adequate road holding, the load on the front axle, under all conditions, must not be less than 40% or more than 70% of the total weight.

Care must be taken when distributing loads. The loadings above are maximum loadings and must not be exceeded under any circumstances.

CAUTION: When fitting a towbar, it must meet certain minimum requirements as specified by Type Approval Regulations. The bar will have marked on it the approval standard (94/20/EC) and the maximum download, or noseweight, that it can accept. It must fit the manufacturer's approved mounting points and must not obscure the towing vehicle's number plate.

BESSACARR E500 SERIES

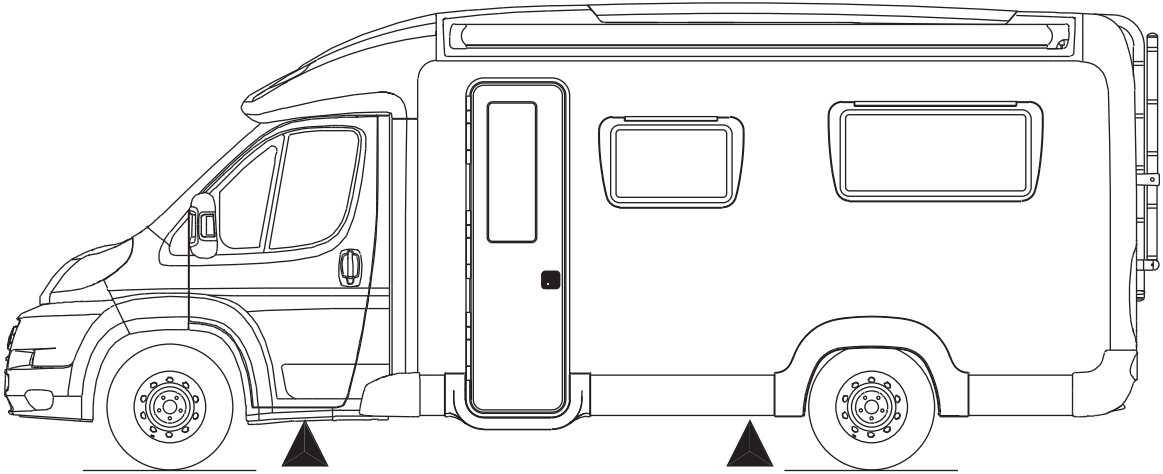

Jacking Points: ▲

BESSACARR E500 SERIES GENERAL BODY SYSTEMS

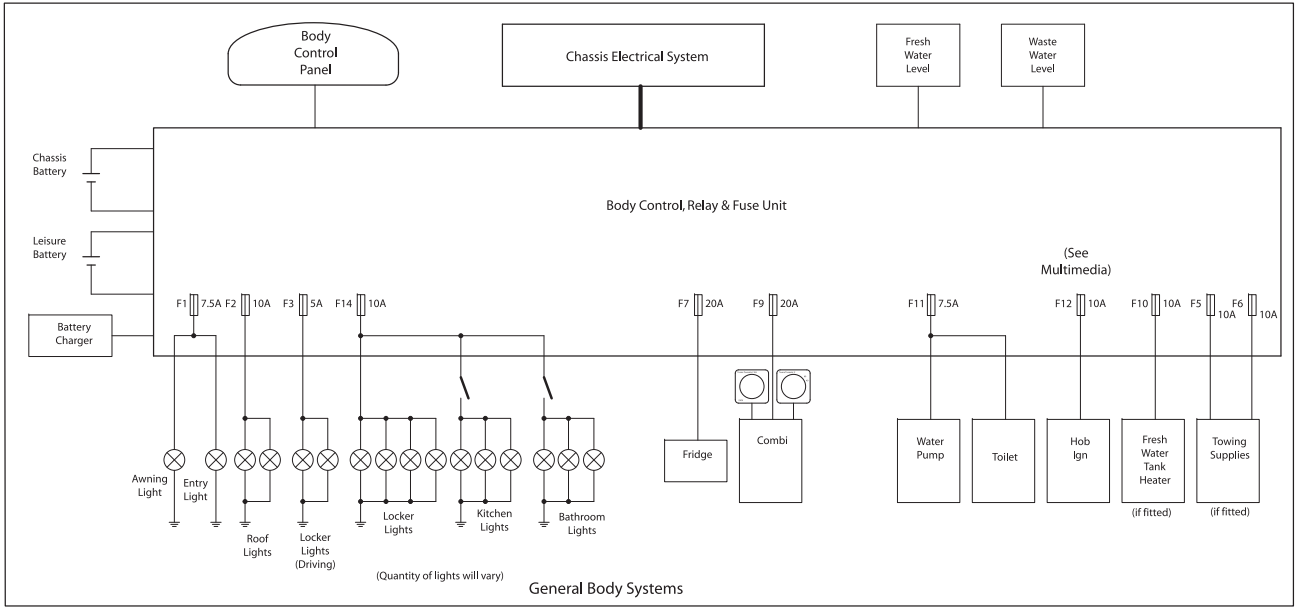

BESSACARR E500 SERIES STATUTORY LIGHTING AND DOOR LOCKING

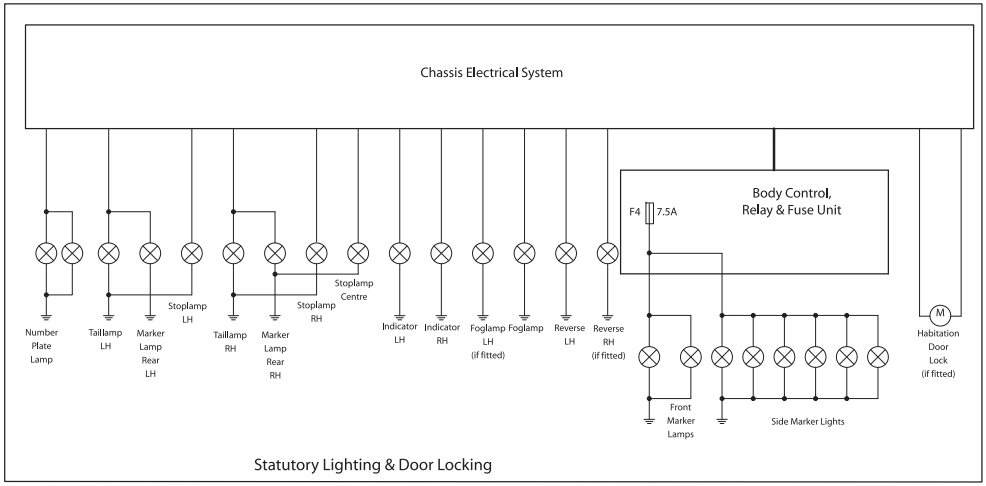

BESSACARR E500 SERIES 230V AC SYSTEMS

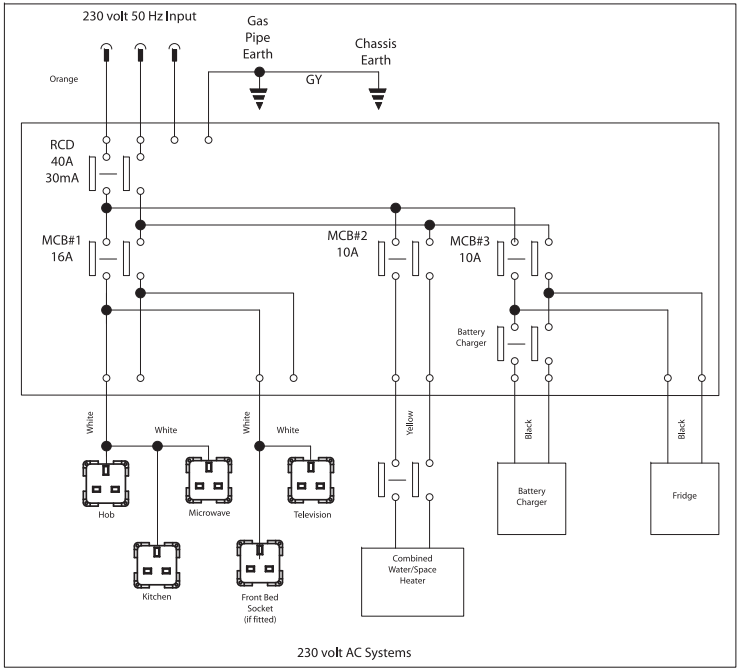

BESSACARR E500 SERIES MULTIMEDIA SYSTEMS

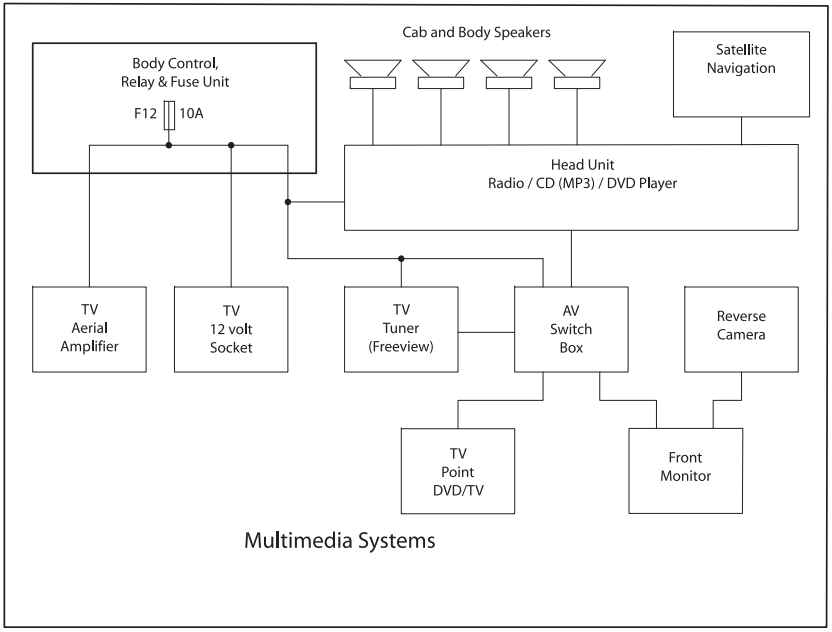

BESSACARR E500 SERIES				
	Bulb Reference	**Bulb Rating**		
EXTERIOR LIGHTS				
Front marker light	W5W	12V 5W		
Side marker light	W5W	12V 5W		
Rear high level marker light	W5W	12V 5W		
High level stop lamp	T5/13.5	12V 2.3W		
Rear indicator lamp	PY21 Orange	12V 21W		
Rear stop / Tail lamp	PY21/5W	12V 21W / 5W		
Rear reverse lamp	P21	12V 21W		
Rear fog lamp	P21	12V 21W		
Number plate light	C5W	12V 5W		
INTERIOR LIGHTS				
Downlighters	Halogen capsule	G4 12V 10W		
Locker spotlights	GU4 / MR11 Dichroic	GU4 12V 10W		
kitchen locker light	300mm Fluorescent	12V 8W		
Panel mounted fluorescent lamps	300mm Fluorescent	12V 13W		
Skylight surround fluorescent lamps	300mm Fluorescent	12V 8W		
Drop down monitor surround lamps	GU4 / MR11 Dichroic	GU4 12V 10W		
Drop down monitor integral lamps	Halogen capsule	G4 12V 5W		
Awning lamp	P21W	12V 21W		

Note: Not all lights and bulbs feature on all models within a range